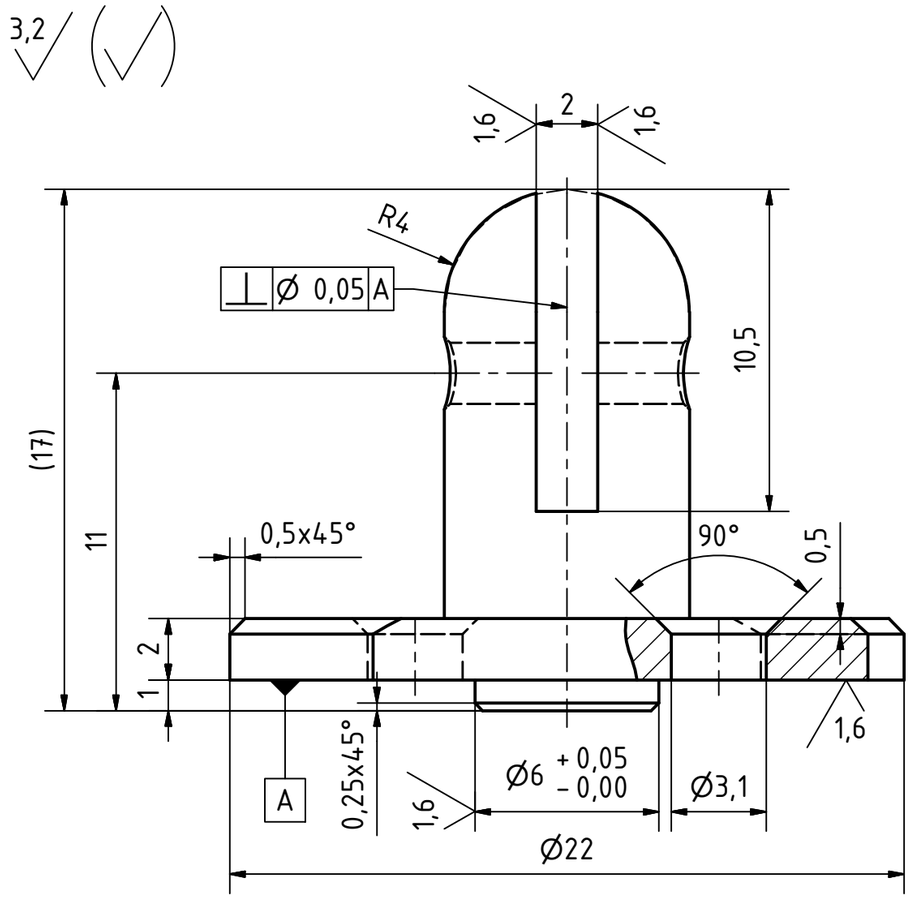

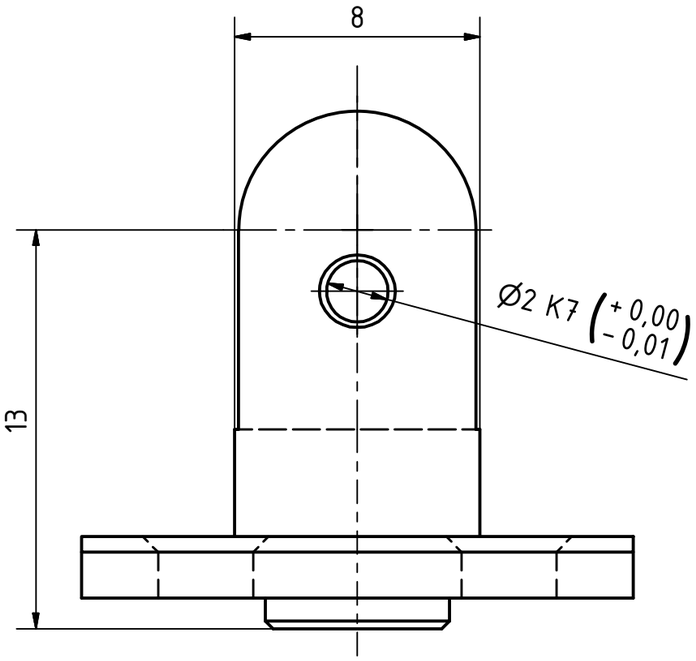

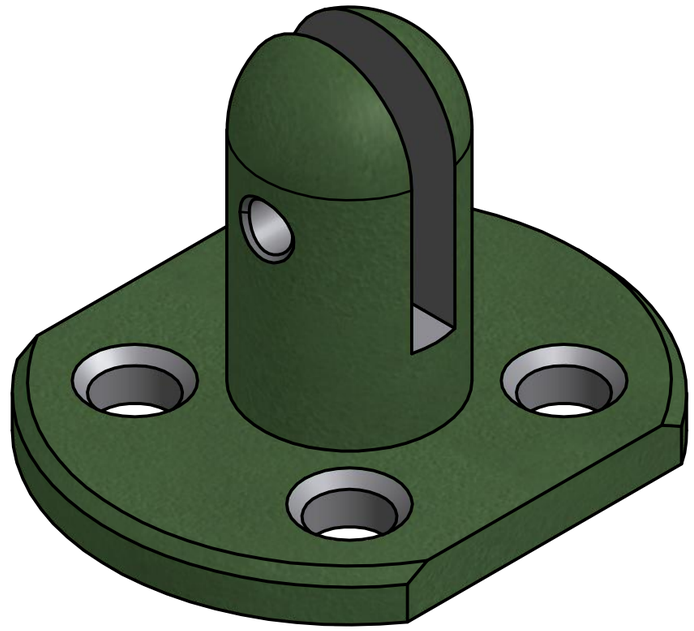

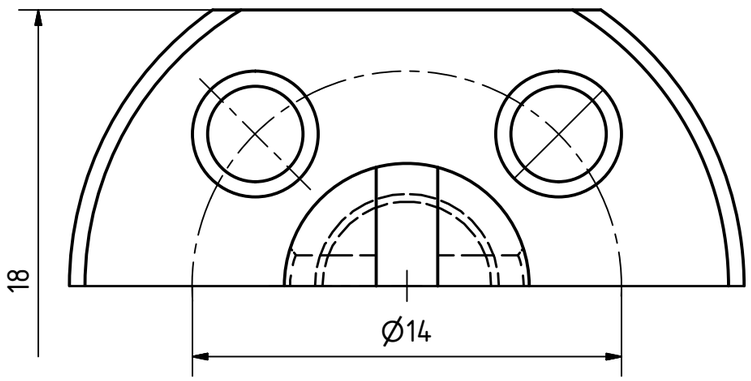

Break Sharp Edges: 0,1 mm

Revision	Date	Description
X		

Engineered by:		Name:	Date:	Scale: 5:1
	Designer:	Galba, J.	19/12/2009	
	Approved:	Galba, J.	19/12/2009	SheetSize: A3

Project:
Miniature Model Air Engine

Material: Stainless Steel

Total Mass: 0.009 kg

Title:
Vertical Stirling Engine with Glass Dome
Support Link Holder

Corresponding symbols		▽	▼	▽▽	▼▼	▽▽▽	▼▼▼	
Roughness Classes (NBN 88-02) (ISO 1302)	N11	N10	N9	N8	N7	N6	N5	N4
Roughness Value "Ra" in µm (NBN 88-02) (ISO 1302)	25	12,5	6,3	3,2	1,6	0,8	0,4	0,2

Allowable deviations for dimensions without tolerance indication (machined surfaces)

	For measurements (deviations in mm)								Fillets and chamfers					Angles (in ° and ')				
	Dimensions in mm								Dimensions in mm					Length of the shortest leg				
Accuracyclass (ISO 2768.1)	0,5 to 3	>3 to 6	>6 to 30	>30 to 120	>120 to 400	>400 to 1000	>1000 to 2000	>2000 to 4000	0,5 to 3	>3 to 6	>6 to 30	>30 to 120	>120 to 400	to 10	>10 to 50	>50 to 120	>120 to 400	above 400
f Fine	±0,05	±0,05	±0,1	±0,15	±0,2	±0,3	±0,5	±0,8	±0,2	±0,5	±1	±2	±4	±1°	±30'	±20'	±10'	±5'
m Medium	±0,1	±0,1	±0,2	±0,3	±0,5	±0,8	±1,2	±2										
c Rough	±0,2	±0,3	±0,5	±0,8	±1,2	±2	±3	±4	±0,4	±1	±2	±4	±8	±1°30'	±1°	±30'	±15'	±10'
v Very Rough	–	±0,5	±1	±1,5	±2,5	±4	±6	±8						±3°	±2°	±1°	±30'	±20'

InventorWizard.be/nl

Drawingnumber:

Sheet:
0001

Design State:
Released

Drawing made with autodesk Inventor
Revisions only permitted by CAD

This document is for educational purposes only and property of Inventor Wizard.
It shall not without our permission be altered, copied, used for manufacturing or communicated to any other person or company.