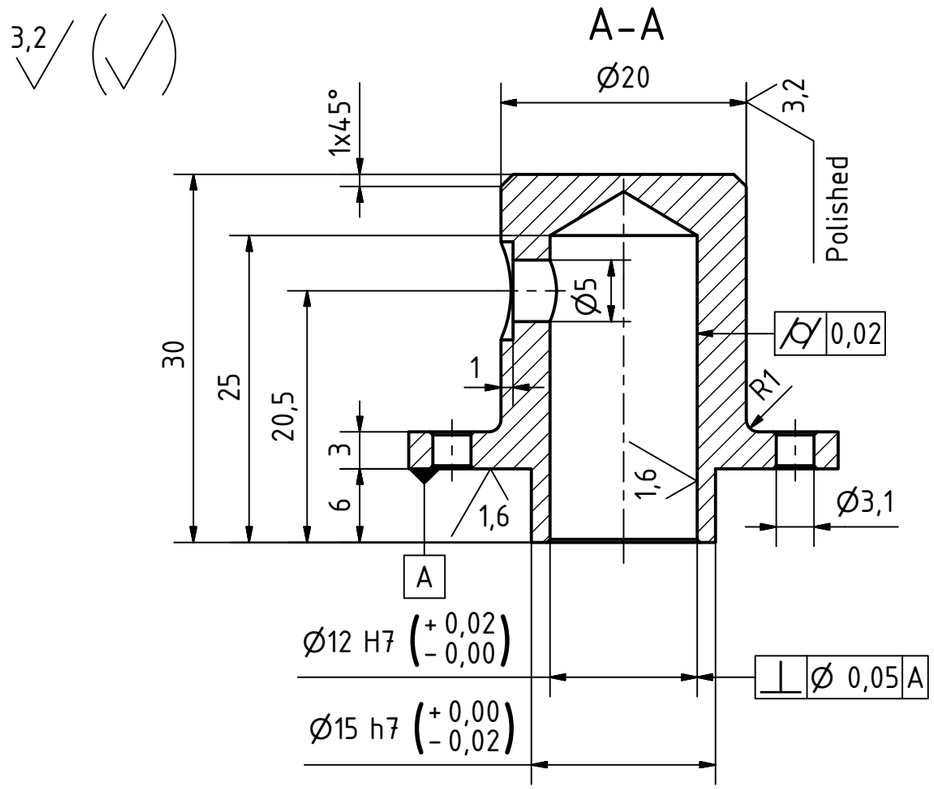

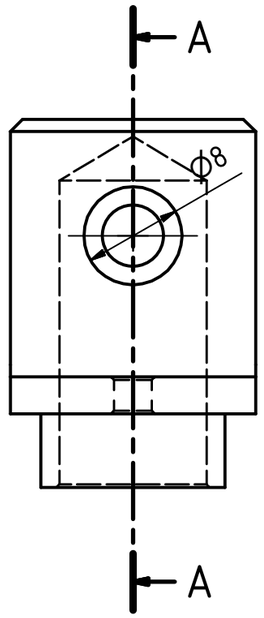

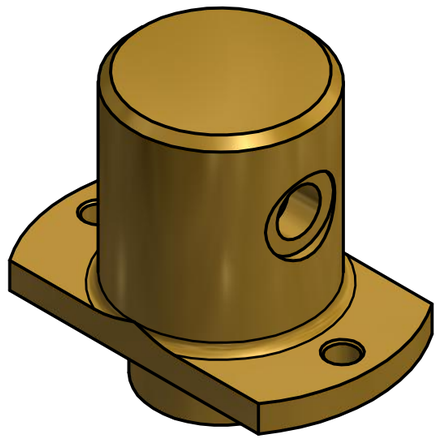

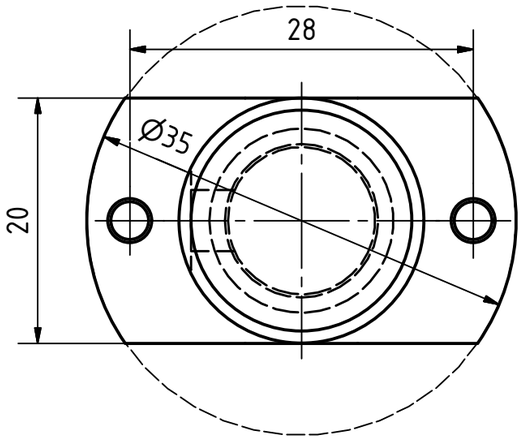

Break Sharp Edges: 0,1 mm

Corresponding symbols		▽	▼	▽▽	▼▼	▽▽▽	▼▼▼	
Roughness Classes (NBN 88-02) (ISO 1302)	N11	N10	N9	N8	N7	N6	N5	N4
Roughness Value "Ra" in µm (NBN 88-02) (ISO 1302)	25	12,5	6,3	3,2	1,6	0,8	0,4	0,2

Allowable deviations for dimensions without tolerance indication (machined surfaces)

Accuracyclass (ISO 2768.1)	For measurements (deviations in mm)								Fillets and chamfers					Angles (in ° and ')				
	Dimensions in mm								Dimensions in mm					Length of the shortest leg				
	0,5 to 3	>3 to 6	>6 to 30	>30 to 120	>120 to 400	>400 to 1000	>1000 to 2000	>2000 to 4000	0,5 to 3	>3 to 6	>6 to 30	>30 to 120	>120 to 400	to 10	>10 to 50	>50 to 120	>120 to 400	above 400
f Fine	±0,05	±0,05	±0,1	±0,15	±0,2	±0,3	±0,5	±0,8	±0,2	±0,5	±1	±2	±4	±1°	±30'	±20'	±10'	±5'
m Medium	±0,1	±0,1	±0,2	±0,3	±0,5	±0,8	±1,2	±2										
c Rough	±0,2	±0,3	±0,5	±0,8	±1,2	±2	±3	±4	±0,4	±1	±2	±4	±8	±1°30'	±1°	±30'	±15'	±10'
v Very Rough	–	±0,5	±1	±1,5	±2,5	±4	±6	±8						±3°	±2°	±1°	±30'	±20'

Revision	Date	Description
X		

Engineered by:		Name:	Date:	Scale: 2:1
	Designer:	Galba, J.	19/12/2009	
	Approved:	Galba, J.	19/12/2009	SheetSize: A3

Project:
Miniature Model Air Engine

Material: Brass, Soft Yellow
Total Mass: 0.055 kg

Title:
Vertical Stirling Engine with Glass Dome
Transfer Cylinder

InventorWizard.be/nl

Drawingnumber:

Sheet:
0001

Design State:
Released

Drawing made with autodesk Inventor Revisions only permitted by CAD

This document is for educational purposes only and property of Inventor Wizard.
It shall not without our permission be altered, copied, used for manufacturing or communicated to any other person or company.